Deep groove ball bearing 6407-2Z FAG

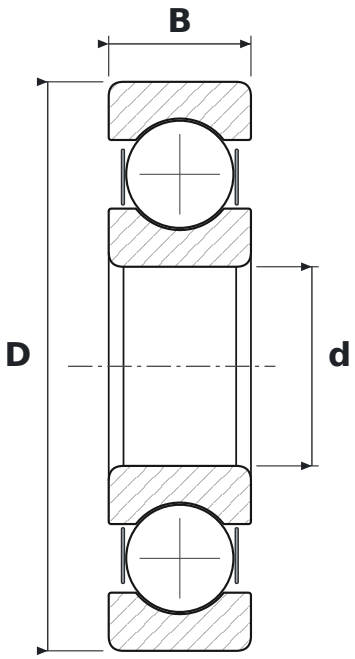

DIMENSIONS

d	bore diameter	**35 mm**
D	outside diameter	**100 mm**
B	width	**25 mm**

WHAT 6407-2Z MEANS

64	łożysko kulkowe zwykłe (6), seria średnic 4 – ciężka
2Z	steel shields, both sides

SPECIFICATIONS

Manufacturer	**FAG**
Manufacturer designation	**6407-2Z**
Rolling elements	**single-row ball bearing**