Deep groove ball bearing 6407 ZZ NSK

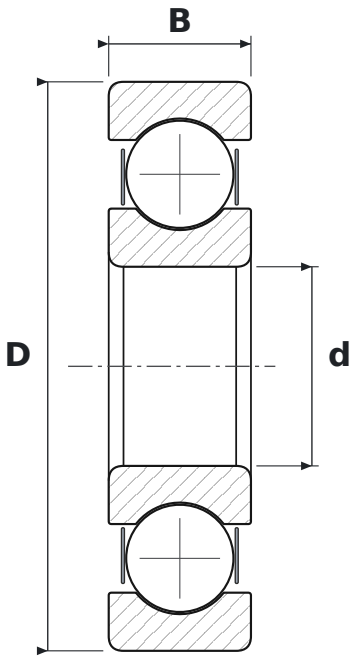

DIMENSIONS

d	bore diameter	**35 mm**
D	outside diameter	**100 mm**
B	width	**25 mm**

WHAT 6407 ZZ MEANS

64	łożysko kulkowe zwykłe (6), seria średnic 4 – ciężka
ZZ	blaszki ochronne, dwustronne

SPECIFICATIONS

Manufacturer	**NSK**
Manufacturer designation	**6407 ZZ**
Rolling elements	**single-row ball bearing**