Deep groove ball bearing 6408-2Z NKE

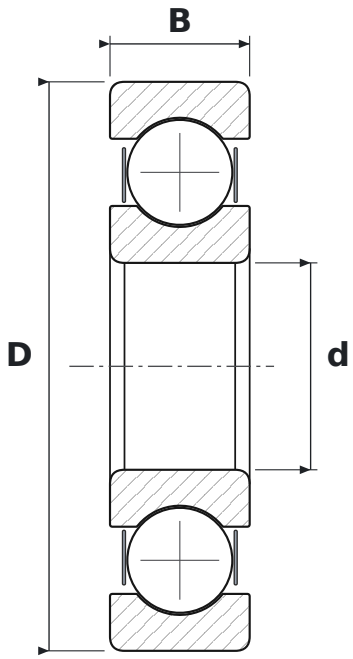

DIMENSIONS

d	bore diameter	**40 mm**
D	outside diameter	**110 mm**
B	width	**27 mm**

WHAT 6408-2Z MEANS

64	łożysko kulkowe zwykłe (6), seria średnic 4 – ciężka
2Z	steel shields, both sides

SPECIFICATIONS

Manufacturer	**NKE**
Manufacturer designation	**6408-2Z**
Rolling elements	**single-row ball bearing**