Deep groove ball bearing 6408-C FAG

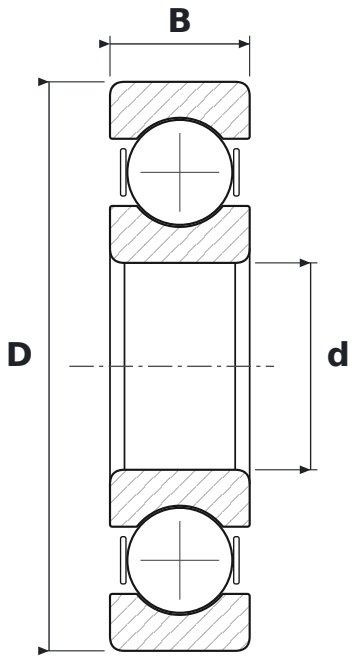

DIMENSIONS

d	bore diameter	**40 mm**
D	outside diameter	**110 mm**
B	width	**27 mm**

WHAT 6408-C MEANS

64	łożysko kulkowe zwykłe (6), seria średnic 4 – ciężka
C	generation C – revised internal design (FAG)

SPECIFICATIONS

Manufacturer	**FAG**
Manufacturer designation	**6408-C**
Rolling elements	**single-row ball bearing**