Deep groove ball bearing 6409-C-2Z FAG

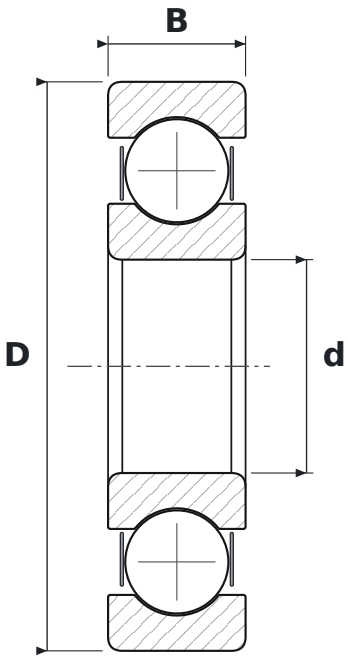

DIMENSIONS

d	bore diameter	**45 mm**
D	outside diameter	**120 mm**
B	width	**29 mm**

WHAT 6409-C-2Z MEANS

64	łożysko kulkowe zwykłe (6), seria średnic 4 – ciężka
C	generation C – revised internal design (FAG)
2Z	steel shields, both sides

SPECIFICATIONS

Manufacturer	**FAG**
Manufacturer designation	**6409-C-2Z (-2Z)**
Rolling elements	**single-row ball bearing**