Deep groove ball bearing 6409 C3 NTN

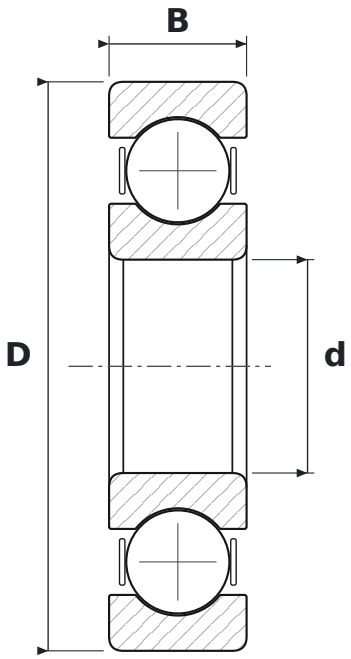

DIMENSIONS

d	bore diameter	**45 mm**
D	outside diameter	**120 mm**
B	width	**29 mm**

WHAT 6409 C3 MEANS

64	łożysko kulkowe zwykłe (6), seria średnic 4 – ciężka
C3	radial clearance greater than normal

SPECIFICATIONS

Manufacturer	**NTN**
Manufacturer designation	**6409 C3**
Rolling elements	**single-row ball bearing**
Mass	**1.57 kg**