Deep groove ball bearing 6410 C4 SKF

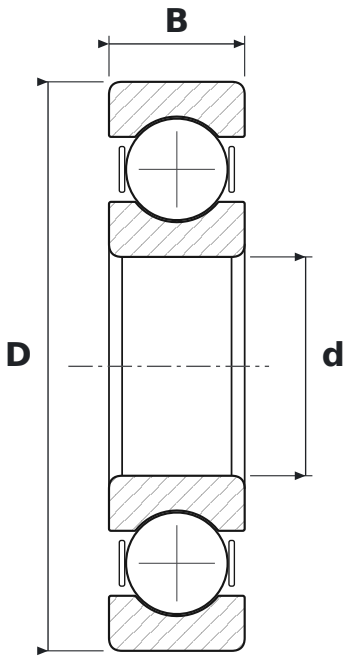

DIMENSIONS

d	bore diameter	**50 mm**
D	outside diameter	**130 mm**
B	width	**31 mm**

WHAT 6410 C4 MEANS

64	łożysko kulkowe zwykłe (6), seria średnic 4 – ciężka
C4	large radial clearance

SPECIFICATIONS

Manufacturer	**SKF**
Manufacturer designation	**6410 C4**
Rolling elements	**single-row ball bearing**
Mass	**1.899 kg**