Deep groove ball bearing 6411-C-C3 FAG

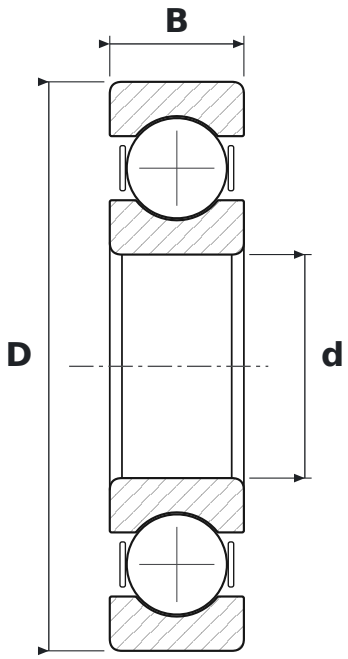

DIMENSIONS

d	bore diameter	**55 mm**
D	outside diameter	**140 mm**
B	width	**33 mm**

WHAT 6411-C-C3 MEANS

64	łożysko kulkowe zwykłe (6), seria średnic 4 – ciężka
C	generation C – revised internal design (FAG)
C3	radial clearance greater than normal

SPECIFICATIONS

Manufacturer	**FAG**
Manufacturer designation	**6411-C-C3 (-C3)**
Rolling elements	**single-row ball bearing**