Deep groove ball bearing 6411 C3 NSK

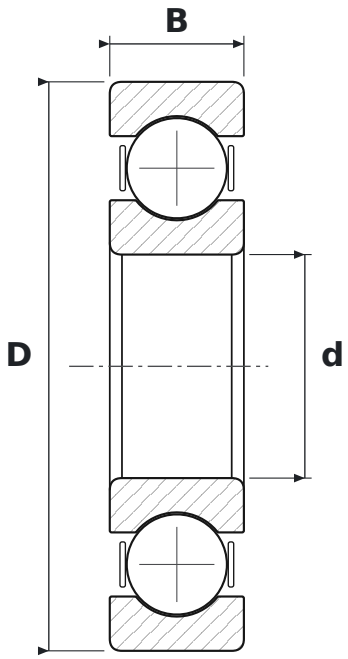

DIMENSIONS

d	bore diameter	**55 mm**
D	outside diameter	**140 mm**
B	width	**33 mm**

WHAT 6411 C3 MEANS

64	łożysko kulkowe zwykłe (6), seria średnic 4 – ciężka
C3	radial clearance greater than normal

SPECIFICATIONS

Manufacturer	**NSK**
Manufacturer designation	**6411 C3**
Rolling elements	**single-row ball bearing**
Mass	**2.4 kg**