CASTOMER

DATASHEET

Deep groove ball bearing 6411 ZEN

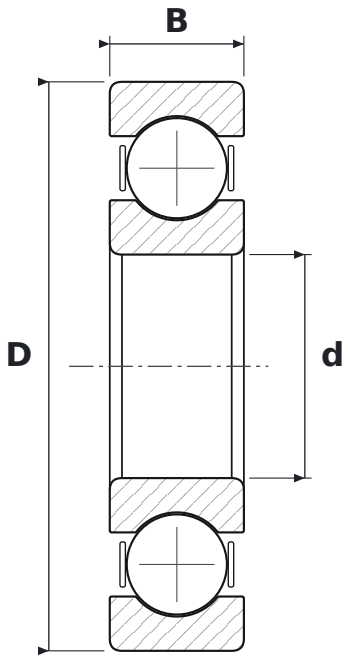

DIMENSIONS

d	bore diameter	**55 mm**
D	outside diameter	**140 mm**
B	width	**33 mm**

SPECIFICATIONS

Manufacturer	**ZEN**
Manufacturer designation	**6411**
Rolling elements	**single-row ball bearing**
Seal	**open – no seals**
Radial internal clearance	**CN – normal**
Mass	**2.3 kg**