Deep groove ball bearing 6412-C3 FAG

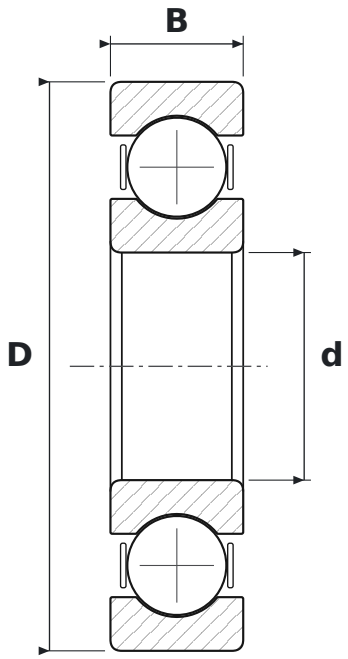

DIMENSIONS

d	bore diameter	**60 mm**
D	outside diameter	**150 mm**
B	width	**35 mm**

WHAT 6412-C3 MEANS

64	łożysko kulkowe zwykłe (6), seria średnic 4 – ciężka
C3	radial clearance greater than normal

SPECIFICATIONS

Manufacturer	**FAG**
Manufacturer designation	**6412-C3**
Rolling elements	**single-row ball bearing**
Mass	**2.77 kg**