CASTOMER

DATASHEET

Deep groove ball bearing 6413 NKE

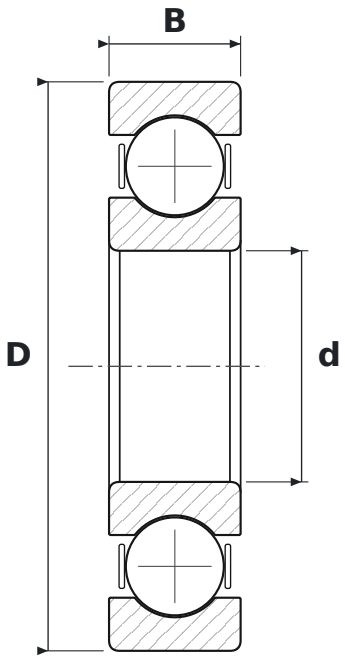

DIMENSIONS

d	bore diameter	**65 mm**
D	outside diameter	**160 mm**
B	width	**37 mm**

SPECIFICATIONS

Manufacturer	**NKE**
Manufacturer designation	**6413**
Rolling elements	**single-row ball bearing**
Seal	**open – no seals**
Radial internal clearance	**CN – normal**
Mass	**3.3 kg**