Deep groove ball bearing 6414-C3 NKE

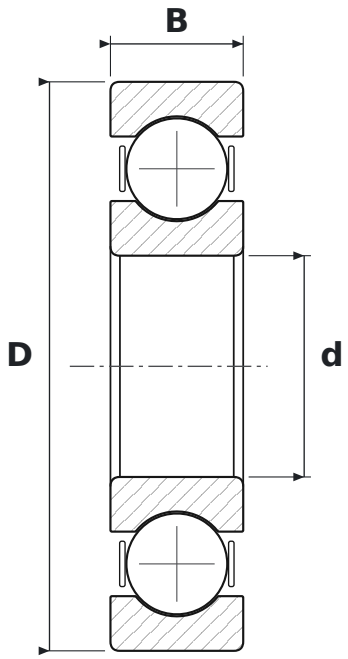

DIMENSIONS

d	bore diameter	**70 mm**
D	outside diameter	**180 mm**
B	width	**42 mm**

WHAT 6414-C3 MEANS

64	łożysko kulkowe zwykłe (6), seria średnic 4 – ciężka
C3	radial clearance greater than normal

SPECIFICATIONS

Manufacturer	**NKE**
Manufacturer designation	**6414-C3**
Rolling elements	**single-row ball bearing**