Deep groove ball bearing 6802 2RS KOYO

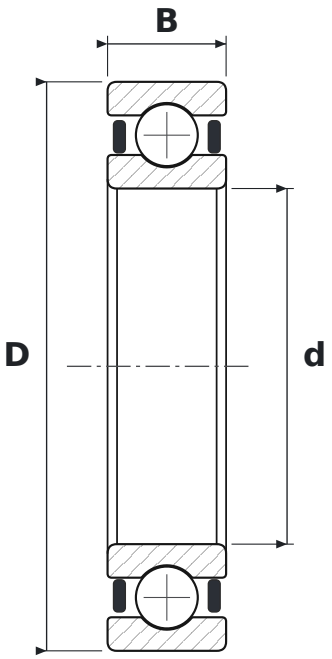

DIMENSIONS

d	bore diameter	**15 mm**
D	outside diameter	**24 mm**
B	width	**5 mm**

SPECIFICATIONS

Manufacturer	**KOYO**
Manufacturer designation	**6802 2RS**
Rolling elements	**single-row ball bearing**
2RS	**uszczelnienia stykowe, dwustronne**
Radial internal clearance	**CN – normal**