Deep groove ball bearing 6804-2NSE NACHI

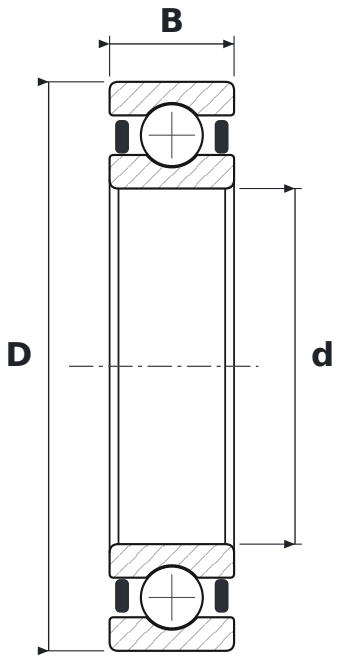

DIMENSIONS

d	bore diameter	**20 mm**
D	outside diameter	**32 mm**
B	width	**7 mm**

SPECIFICATIONS

Manufacturer	**NACHI**
Manufacturer designation	**6804-2NSE**
Rolling elements	**single-row ball bearing**
2RS	**contact rubber seals, both sides**
Radial internal clearance	**CN – normal**