Deep groove ball bearing 6804 JR NTN

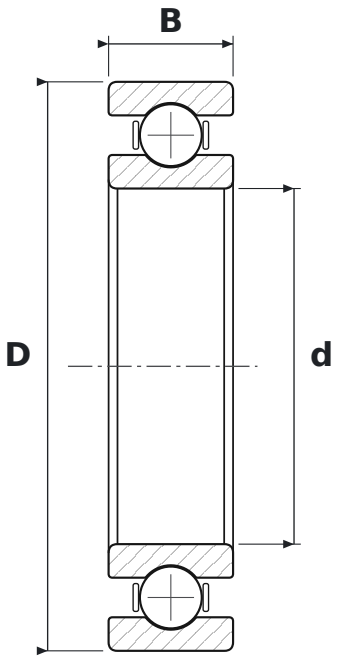

DIMENSIONS

d	bore diameter	**20 mm**
D	outside diameter	**32 mm**
B	width	**7 mm**

SPECIFICATIONS

Manufacturer	**NTN**
Manufacturer designation	**6804 JR**
Rolling elements	**single-row ball bearing**
JR	**riveted pressed steel cage (FAG)**
Seal	**open – no seals**
Radial internal clearance	**CN – normal**
Mass	**0.024 kg**