Deep groove ball bearing 6804 JRC3 NTN

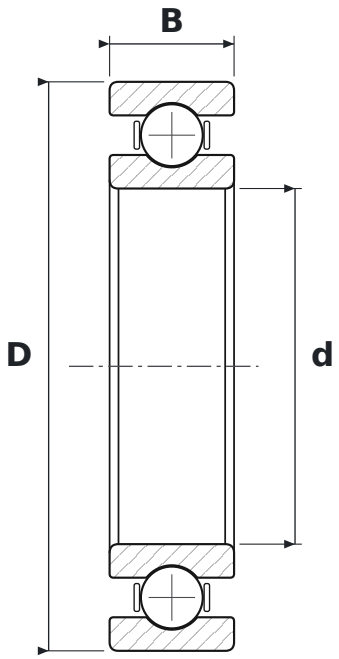

DIMENSIONS

d	bore diameter	**20 mm**
D	outside diameter	**32 mm**
B	width	**7 mm**

WHAT 6804 JRC3 MEANS

JR	riveted pressed steel cage (FAG)
C3	radial clearance greater than normal

SPECIFICATIONS

Manufacturer	**NTN**
Manufacturer designation	**6804 JRC3**
Rolling elements	**single-row ball bearing**