Deep groove ball bearing 687 FAG

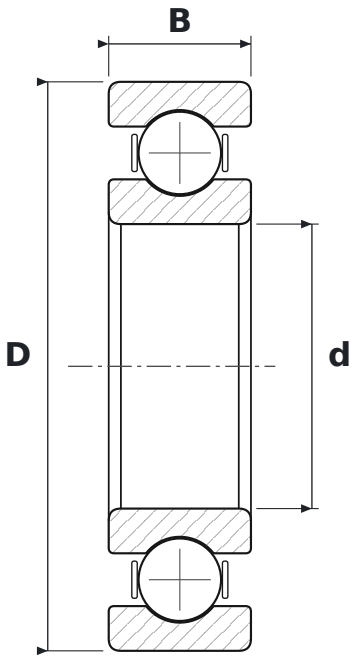

DIMENSIONS

d	bore diameter	**7 mm**
D	outside diameter	**14 mm**
B	width	**3.5 mm**

SPECIFICATIONS

Manufacturer	**FAG**
Manufacturer designation	**687**
Rolling elements	**single-row ball bearing**
Seal	**open – no seals**
Radial internal clearance	**CN – normal**