Deep groove ball bearing 689-2Z FAG

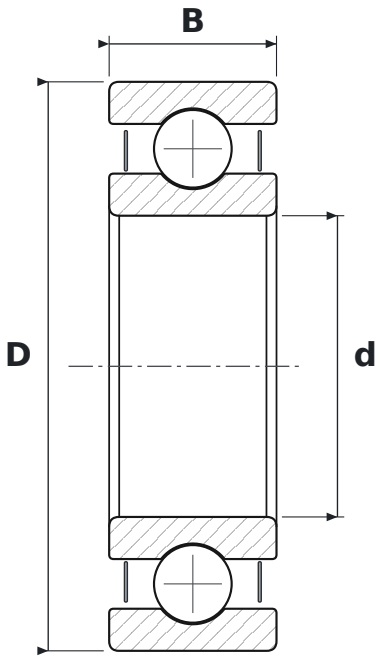

DIMENSIONS

d	bore diameter	**9 mm**
D	outside diameter	**17 mm**
B	width	**5 mm**

SPECIFICATIONS

Manufacturer	**FAG**
Manufacturer designation	**689-2Z**
Rolling elements	**single-row ball bearing**
2Z	**steel shields, both sides**
Radial internal clearance	**CN – normal**