Deep groove ball bearing 689 UMC3 NSK

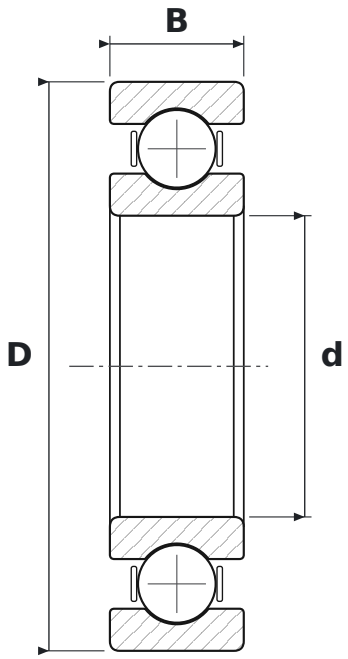

DIMENSIONS

d	bore diameter	**9 mm**
D	outside diameter	**17 mm**
B	width	**4 mm**

SPECIFICATIONS

Manufacturer	**NSK**
Manufacturer designation	**689 UMC3 (CN/C0)**
Rolling elements	**single-row ball bearing**
UM	**manufacturer design code**
C3	**radial clearance greater than normal**
CN	**normal radial clearance**
Seal	**open – no seals**