Deep groove ball bearing 6900 CM NACHI

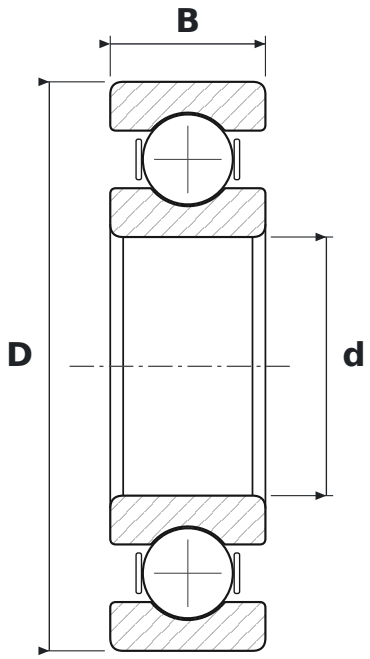

DIMENSIONS

d	bore diameter	**10 mm**
D	outside diameter	**22 mm**
B	width	**6 mm**

SPECIFICATIONS

Manufacturer	**NACHI**
Manufacturer designation	**6900 CM**
Rolling elements	**single-row ball bearing**
CM	**clearance for electric motors (quiet running)**
Seal	**open – no seals**
Radial internal clearance	**CN – normal**