Deep groove ball bearing 6900-ZZECM NACHI

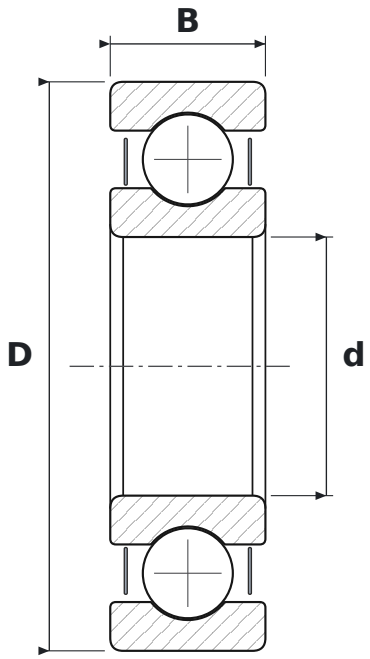

DIMENSIONS

d	bore diameter	**10 mm**
D	outside diameter	**22 mm**
B	width	**6 mm**

WHAT 6900-ZZECM MEANS

ZZE	blaszki ochronne, dwustronne
CM	clearance for electric motors (quiet running)

SPECIFICATIONS

Manufacturer	**NACHI**
Manufacturer designation	**6900-ZZECM**
Rolling elements	**single-row ball bearing**