Deep groove ball bearing 6901-2NSECM NACHI

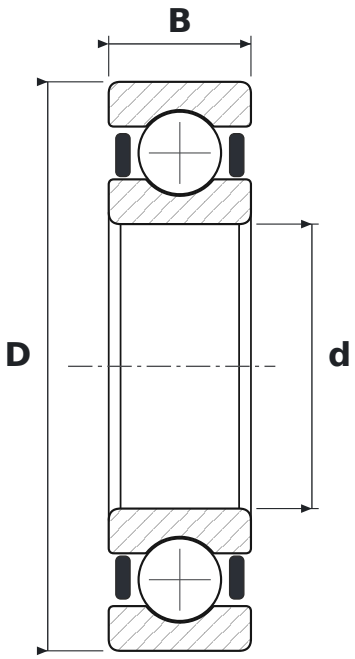

DIMENSIONS

d	bore diameter	**12 mm**
D	outside diameter	**24 mm**
B	width	**6 mm**

WHAT 6901-2NSECM MEANS

2NSE	uszczelnienia gumowe stykowe, dwustronne
CM	clearance for electric motors (quiet running)

SPECIFICATIONS

Manufacturer	**NACHI**
Manufacturer designation	**6901-2NSECM**
Rolling elements	**single-row ball bearing**