Deep groove ball bearing 6901-ZZ NSK

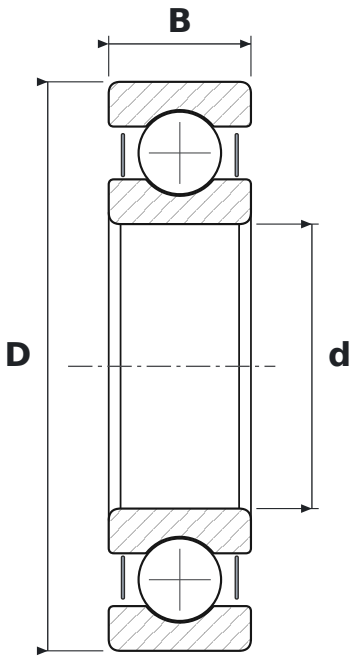

DIMENSIONS

d	bore diameter	**12 mm**
D	outside diameter	**24 mm**
B	width	**6 mm**

SPECIFICATIONS

Manufacturer	**NSK**
Manufacturer designation	**6901-ZZ**
Rolling elements	**single-row ball bearing**
2Z	**steel shields, both sides**
Radial internal clearance	**CN – normal**
Mass	**0.013 kg**