Deep groove ball bearing 6902-2NSECM NACHI

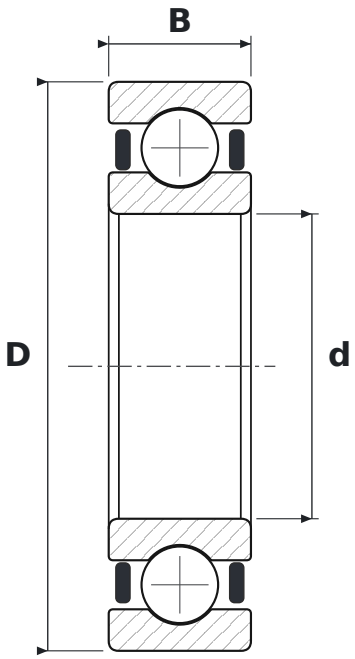

DIMENSIONS

d	bore diameter	**15 mm**
D	outside diameter	**28 mm**
B	width	**7 mm**

WHAT 6902-2NSECM MEANS

2NSE	uszczelnienia gumowe stykowe, dwustronne
CM	clearance for electric motors (quiet running)

SPECIFICATIONS

Manufacturer	**NACHI**
Manufacturer designation	**6902-2NSECM**
Rolling elements	**single-row ball bearing**