Deep groove ball bearing 6903-2NKECM NACHI

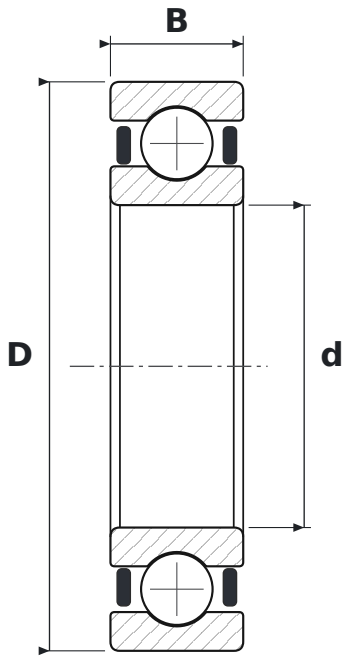

DIMENSIONS

d	bore diameter	**17 mm**
D	outside diameter	**30 mm**
B	width	**7 mm**

WHAT 6903-2NKECM MEANS

2NKE	uszczelnienia gumowe bezstykowe, dwustronne
CM	clearance for electric motors (quiet running)

SPECIFICATIONS

Manufacturer	**NACHI**
Manufacturer designation	**6903-2NKECM**
Rolling elements	**single-row ball bearing**