CASTOMER

DATASHEET

Deep groove ball bearing 6903 JRXZZ/2AS NTN

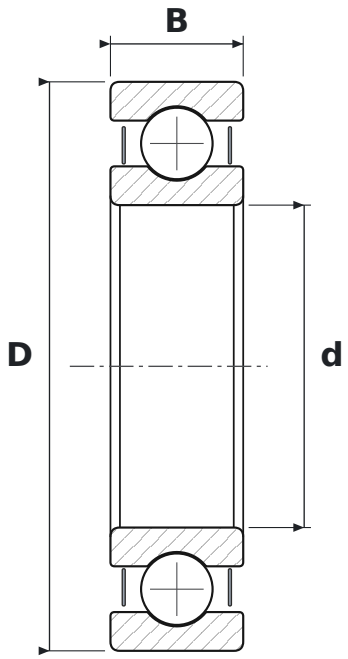

DIMENSIONS

d	bore diameter	**17 mm**
D	outside diameter	**30 mm**
B	width	**7 mm**

SPECIFICATIONS

Manufacturer	**NTN**
Manufacturer designation	**6903 JRXZZ/2AS**
Rolling elements	**single-row ball bearing**
JR	**riveted pressed steel cage (FAG)**
2Z	**steel shields, both sides**
Radial internal clearance	**CN – normal**