Deep groove ball bearing 6903 ZZC3 KOYO

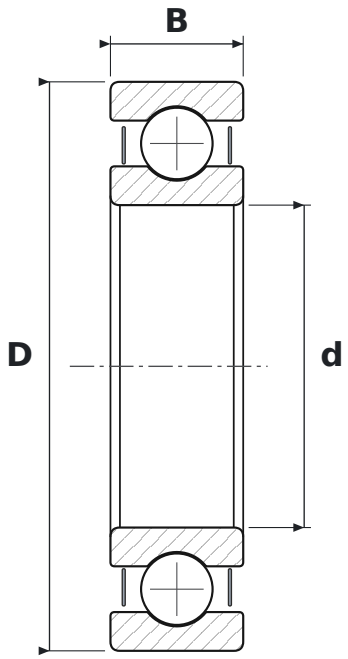

DIMENSIONS

d	bore diameter	**17 mm**
D	outside diameter	**30 mm**
B	width	**7 mm**

WHAT 6903 ZZC3 MEANS

ZZ	blaszki ochronne, dwustronne
C3	radial clearance greater than normal

SPECIFICATIONS

Manufacturer	**KOYO**
Manufacturer designation	**6903 ZZC3**
Rolling elements	**single-row ball bearing**