Deep groove ball bearing 6904-DDUC3 NSK

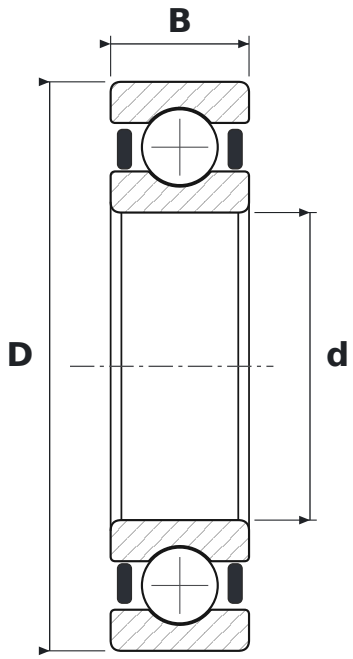

DIMENSIONS

d	bore diameter	**20 mm**
D	outside diameter	**37 mm**
B	width	**9 mm**

WHAT 6904-DDUC3 MEANS

DDU	uszczelnienia gumowe stykowe (standardowo kauczuk nitrylowy NBR), dwustronne, od −10 do +100 °C
C3	radial clearance greater than normal

SPECIFICATIONS

Manufacturer	**NSK**
Manufacturer designation	**6904-DDUC3**
Rolling elements	**single-row ball bearing**
Mass	**0.036 kg**