Deep groove ball bearing 6904-LLUC35K NTN

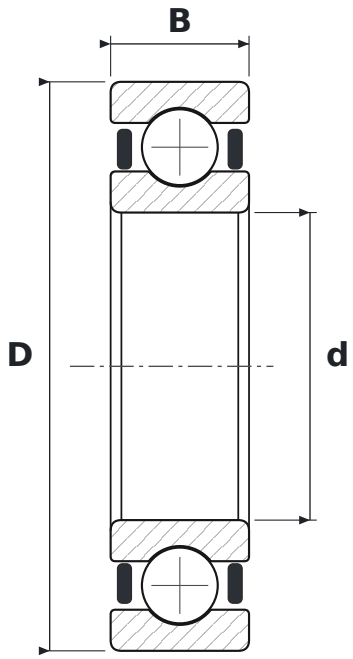

DIMENSIONS

d	bore diameter	**20 mm**
D	outside diameter	**37 mm**
B	width	**9 mm**

WHAT 6904-LLUC35K MEANS

LLU	uszczelnienia stykowe z kauczuku nitrylowego (NBR), dwustronne, od −20 do +120 °C
C3	radial clearance greater than normal
5K	smar Kyodo Yushi Multemp SRL (od −40 do +150 °C)

SPECIFICATIONS

Manufacturer	**NTN**
Manufacturer designation	**6904-LLUC35K**
Rolling elements	**single-row ball bearing**