Deep groove ball bearing 6904-LLUNR2AS NTN

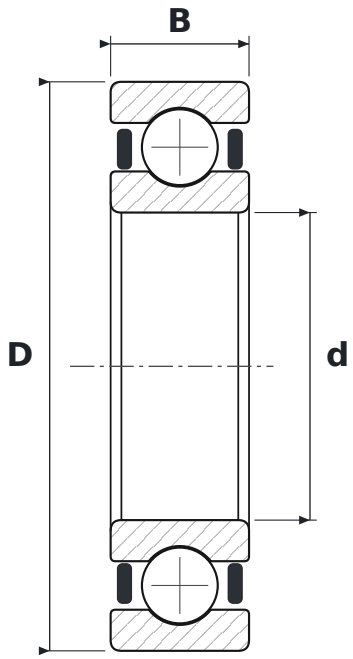

DIMENSIONS

d	bore diameter	**20 mm**
D	outside diameter	**37 mm**
B	width	**9 mm**

WHAT 6904-LLUNR2AS MEANS

LLU	uszczelnienia stykowe z kauczuku nitrylowego (NBR), dwustronne, od −20 do +120 °C
NR	snap ring groove with snap ring
2AS	smar Shell Alvania S2 (od −25 do +120 °C)

SPECIFICATIONS

Manufacturer	**NTN**
Manufacturer designation	**6904-LLUNR2AS**
Rolling elements	**single-row ball bearing**
Mass	**0.036 kg**