Deep groove ball bearing 6904 ZZ KOYO

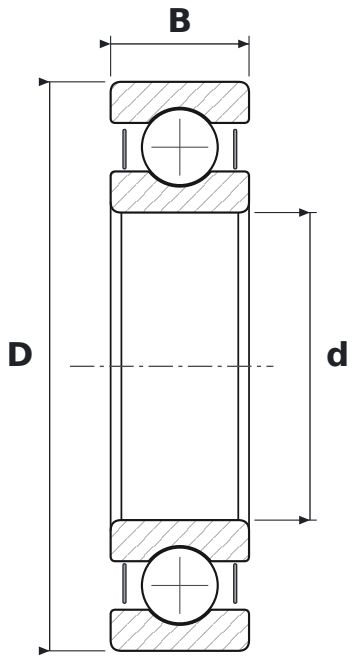

DIMENSIONS

d	bore diameter	**20 mm**
D	outside diameter	**37 mm**
B	width	**9 mm**

SPECIFICATIONS

Manufacturer	**KOYO**
Manufacturer designation	**6904 ZZ**
Rolling elements	**single-row ball bearing**
2Z	**steel shields, both sides**
Radial internal clearance	**CN – normal**