Deep groove ball bearing 6905 2RS KOYO

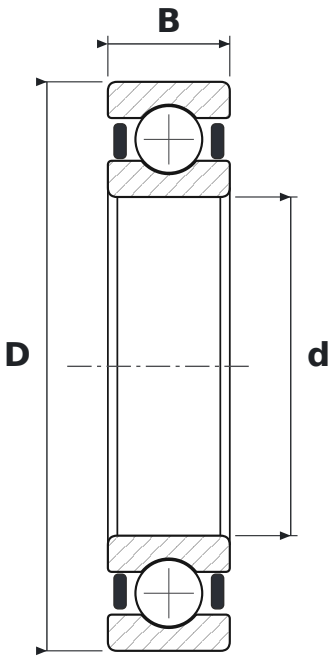

DIMENSIONS

d	bore diameter	**25 mm**
D	outside diameter	**42 mm**
B	width	**9 mm**

SPECIFICATIONS

Manufacturer	**KOYO**
Manufacturer designation	**6905 2RS**
Rolling elements	**single-row ball bearing**
2RS	**uszczelnienia stykowe, dwustronne**
Radial internal clearance	**CN – normal**