Deep groove ball bearing 6905-ZZC3 NSK

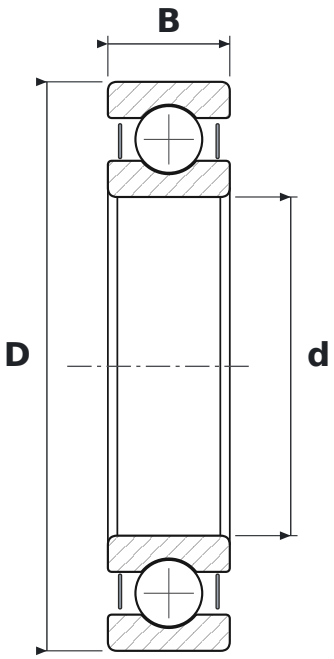

DIMENSIONS

d	bore diameter	**25 mm**
D	outside diameter	**42 mm**
B	width	**9 mm**

WHAT 6905-ZZC3 MEANS

ZZ	blaszki ochronne, dwustronne
C3	radial clearance greater than normal

SPECIFICATIONS

Manufacturer	**NSK**
Manufacturer designation	**6905-ZZC3**
Rolling elements	**single-row ball bearing**
Mass	**0.045 kg**