CASTOMER

DATASHEET

Deep groove ball bearing 6905-ZZECM NACHI

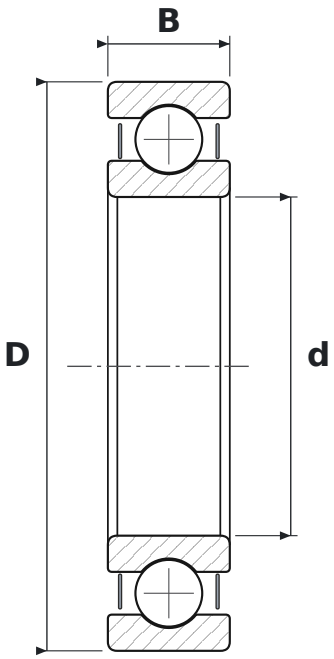

DIMENSIONS

d	bore diameter	**25 mm**
D	outside diameter	**42 mm**
B	width	**9 mm**

WHAT 6905-ZZECM MEANS

ZZE	blaszki ochronne, dwustronne
CM	clearance for electric motors (quiet running)

SPECIFICATIONS

Manufacturer	**NACHI**
Manufacturer designation	**6905-ZZECM**
Rolling elements	**single-row ball bearing**