Deep groove ball bearing 6908 ZZ KOYO

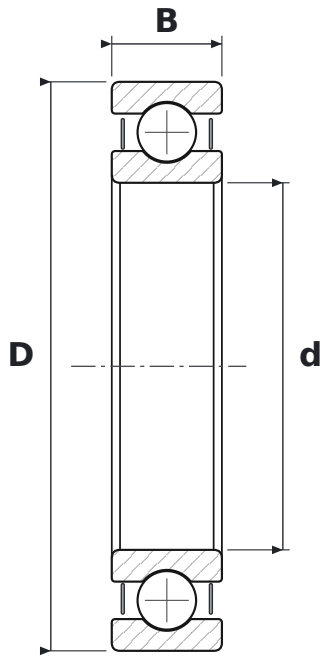

DIMENSIONS

d	bore diameter	**40 mm**
D	outside diameter	**62 mm**
B	width	**12 mm**

SPECIFICATIONS

Manufacturer	**KOYO**
Manufacturer designation	**6908 ZZ**
Rolling elements	**single-row ball bearing**
2Z	**steel shields, both sides**
Radial internal clearance	**CN – normal**