Deep groove ball bearing 6908 ZZC3/2AS NTN

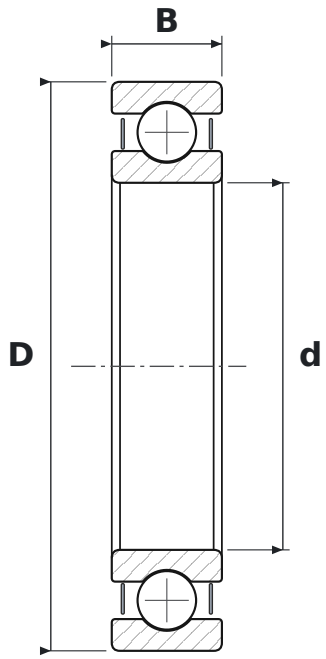

DIMENSIONS

d	bore diameter	**40 mm**
D	outside diameter	**62 mm**
B	width	**12 mm**

WHAT 6908 ZZC3/2AS MEANS

ZZ	blaszki ochronne, dwustronne
C3	radial clearance greater than normal
2AS	smar Shell Alvania S2 (od −25 do +120 °C)

SPECIFICATIONS

Manufacturer	**NTN**
Manufacturer designation	**6908 ZZC3/2AS**
Rolling elements	**single-row ball bearing**