Deep groove ball bearing 695-2RSR FAG

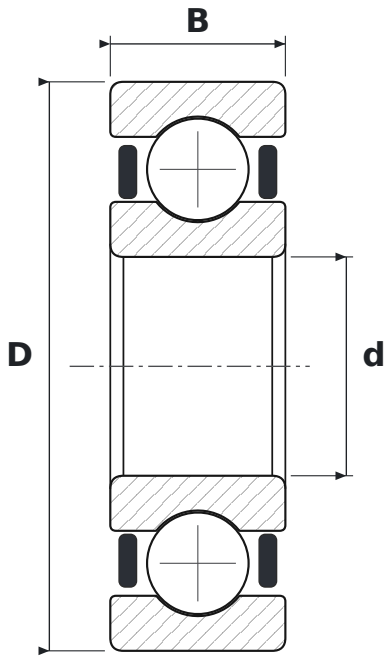

DIMENSIONS

d	bore diameter	**5 mm**
D	outside diameter	**13 mm**
B	width	**4 mm**

SPECIFICATIONS

Manufacturer	**FAG**
Manufacturer designation	**695-2RSR**
Rolling elements	**single-row ball bearing**
2RS	**contact rubber seals, both sides**
Radial internal clearance	**CN – normal**