Angular contact ball bearing 7203 B KOYO

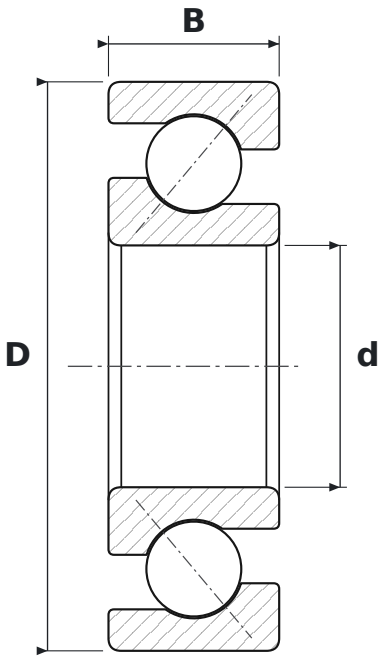

DIMENSIONS

d	bore diameter	**17 mm**
D	outside diameter	**40 mm**
B	width	**12 mm**

SPECIFICATIONS

Manufacturer	**KOYO**
Manufacturer designation	**7203 B**
Rolling elements	**single-row ball bearing**
B	**40° contact angle**
Seal	**open – no seals**
Radial internal clearance	**CN – normal**