Angular contact ball bearing 7203 BETVP NKE

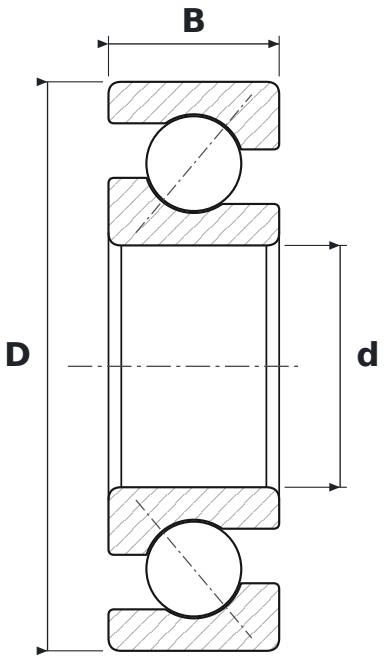

DIMENSIONS

d	bore diameter	**17 mm**
D	outside diameter	**40 mm**
B	width	**12 mm**

WHAT 7203 BETVP MEANS

BE	40° contact angle, reinforced design
TVP	koszyk poliamidowy okienkowy

SPECIFICATIONS

Manufacturer	**NKE**
Manufacturer designation	**7203 BETVP**
Rolling elements	**single-row ball bearing**