# Angular contact ball bearing 7204 B NACHI

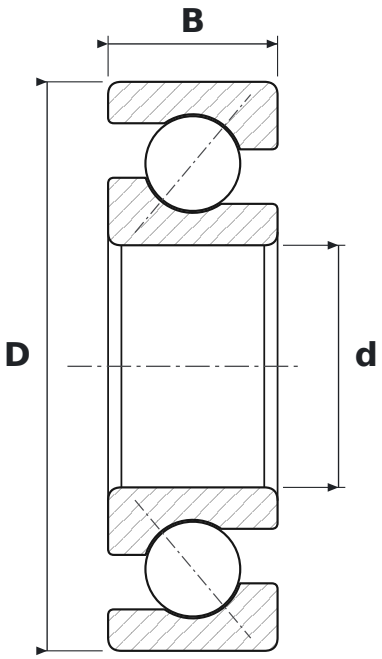


## DIMENSIONS

| | | |
|---|---|---|
| **d** | bore diameter | **20 mm** |
| **D** | outside diameter | **47 mm** |
| **B** | width | **14 mm** |

## SPECIFICATIONS

| | |
|---|---|
| Manufacturer | **NACHI** |
| Manufacturer designation | **7204 B** |
| Rolling elements | **single-row ball bearing** |
| B | **40° contact angle** |
| Seal | **open – no seals** |
| Radial internal clearance | **CN – normal** |