Angular contact ball bearing 7204 B2RS ZEN

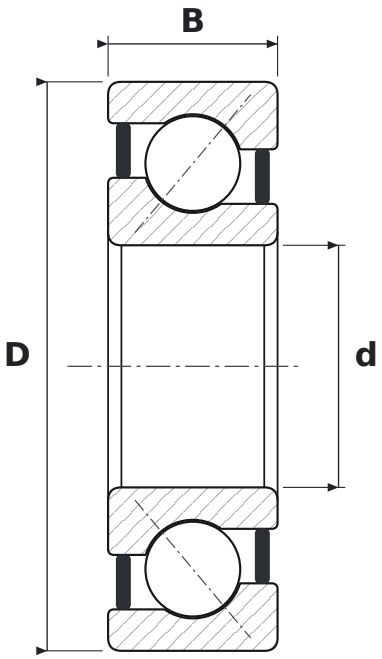

DIMENSIONS

d	bore diameter	**20 mm**
D	outside diameter	**47 mm**
B	width	**14 mm**

WHAT 7204 B2RS MEANS

B	40° contact angle
2RS	uszczelnienia stykowe z gumy syntetycznej, dwustronne (od −20 do +110 °C)

SPECIFICATIONS

Manufacturer	**ZEN**
Manufacturer designation	**7204 B2RS**
Rolling elements	**single-row ball bearing**
Mass	**0.116 kg**