Angular contact ball bearing 7204 BEP SKF

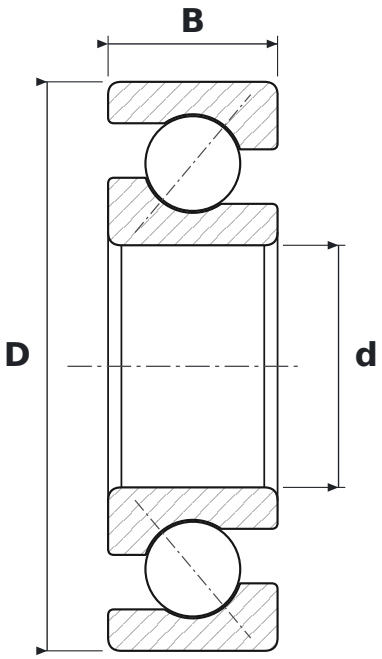

DIMENSIONS

d	bore diameter	**20 mm**
D	outside diameter	**47 mm**
B	width	**14 mm**

SPECIFICATIONS

Manufacturer	**SKF**
Manufacturer designation	**7204 BEP**
Rolling elements	**single-row ball bearing**
BEP	**40° contact angle, reinforced, polyamide cage**
Seal	**open – no seals**
Radial internal clearance	**CN – normal**
Mass	**0.102 kg**