Angular contact ball bearing 7204 BW NSK

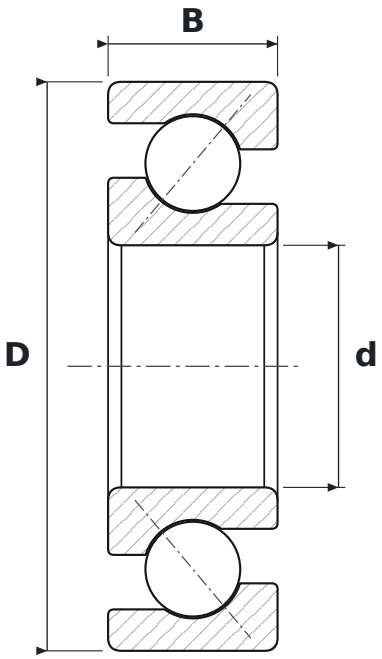

DIMENSIONS

d	bore diameter	**20 mm**
D	outside diameter	**47 mm**
B	width	**14 mm**

WHAT 7204 BW MEANS

B	40° contact angle
W	koszyk stalowy tłoczony

SPECIFICATIONS

Manufacturer	**NSK**
Manufacturer designation	**7204 BW**
Rolling elements	**single-row ball bearing**