# Angular contact ball bearing 7206 BETVP NKE

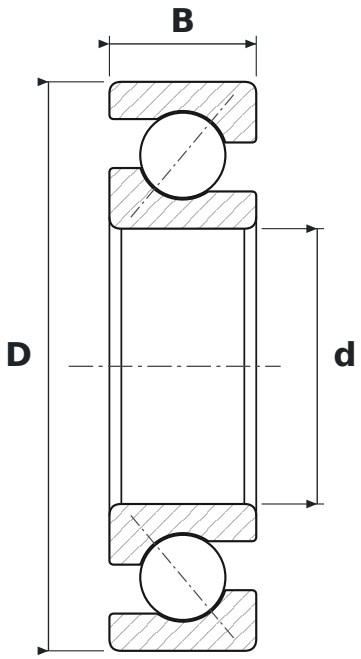


## DIMENSIONS

| | | |
|---|---|---|
| **d** | bore diameter | **30 mm** |
| **D** | outside diameter | **62 mm** |
| **B** | width | **16 mm** |

## WHAT 7206 BETVP MEANS

| | |
|---|---|
| **BE** | 40° contact angle, reinforced design |
| **TVP** | koszyk poliamidowy okienkowy |

## SPECIFICATIONS

| | |
|---|---|
| Manufacturer | **NKE** |
| Manufacturer designation | **7206 BETVP** |
| Rolling elements | **single-row ball bearing** |
| Mass | **0.2 kg** |