Angular contact ball bearing 7207-B-MP FAG

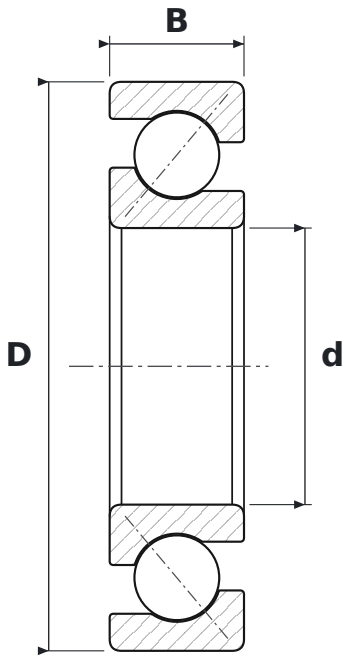

DIMENSIONS

d	bore diameter	**35 mm**
D	outside diameter	**72 mm**
B	width	**17 mm**

WHAT 7207-B-MP MEANS

B	40° contact angle
MP	koszyk mosiężny masywny

SPECIFICATIONS

Manufacturer	**FAG**
Manufacturer designation	**7207-B-MP**
Rolling elements	**single-row ball bearing**