CASTOMER

DATASHEET

Angular contact ball bearing 7213 B NSK

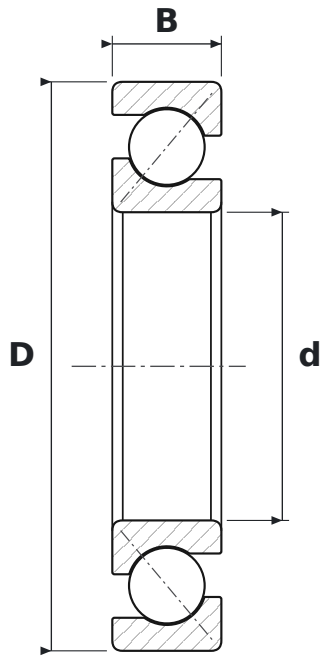

DIMENSIONS

d	bore diameter	**65 mm**
D	outside diameter	**120 mm**
B	width	**23 mm**

SPECIFICATIONS

Manufacturer	**NSK**
Manufacturer designation	**7213 B**
Rolling elements	**single-row ball bearing**
B	**40° contact angle**
Seal	**open – no seals**
Radial internal clearance	**CN – normal**