Angular contact ball bearing 7226 B KOYO

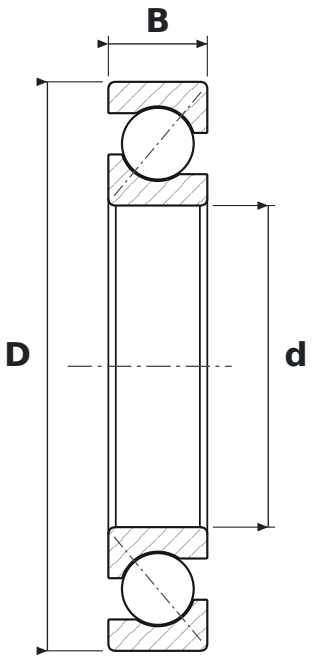

DIMENSIONS

d	bore diameter	**130 mm**
D	outside diameter	**230 mm**
B	width	**40 mm**

SPECIFICATIONS

Manufacturer	**KOYO**
Manufacturer designation	**7226 B**
Rolling elements	**single-row ball bearing**
B	**40° contact angle**
Seal	**open – no seals**
Radial internal clearance	**CN – normal**