Angular contact ball bearing 7226-B-MP-UO FAG

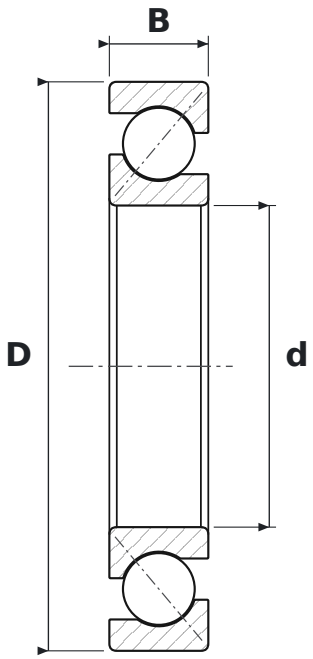

DIMENSIONS

d	bore diameter	**130 mm**
D	outside diameter	**230 mm**
B	width	**40 mm**

WHAT 7226-B-MP-UO MEANS

B	40° contact angle
MP	koszyk mosiężny masywny
UO	wykonanie uniwersalne do montażu parami – para bezluzowa w układzie O i X

SPECIFICATIONS

Manufacturer	**FAG**
Manufacturer designation	**7226-B-MP-UO**
Rolling elements	**single-row ball bearing**
Mass	**6.92 kg**