Angular contact ball bearing 7306 BE-2RZP/GWF SKF

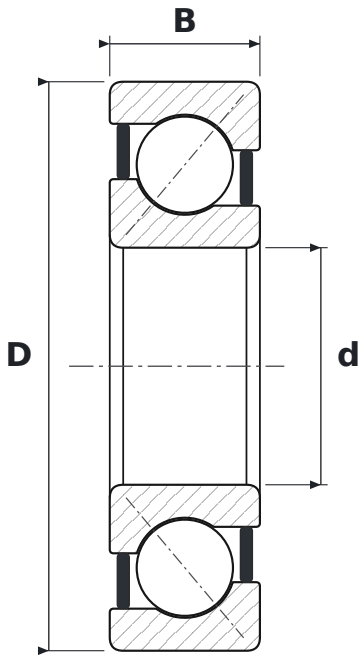

DIMENSIONS

d	bore diameter	**30 mm**
D	outside diameter	**72 mm**
B	width	**19 mm**

WHAT 7306 BE-2RZP/GWF MEANS

BE	40° contact angle, reinforced design
2RZ	non-contact rubber seals, both sides
P	koszyk z poliamidu PA66 wzmocnionego włóknem szklanym, prowadzony na elementach tocznych

SPECIFICATIONS

Manufacturer	**SKF**
Manufacturer designation	**7306 BE-2RZP/GWF**
Rolling elements	**single-row ball bearing**